wilks
simple analytical solutions

InfraCal 2 Analyzer

Model TRANS-SP

User's Guide



InfraCal and Wilks are registered trademarks of Wilks Enterprise, Inc.
Copyright 2013 Wilks Enterprise, Inc., East Norwalk, CT

WilksIR.com

Rev. 1.3, November 2013

Table of Contents

1. InfraCal 2, Model TRANS-SP Overview 3

1.1. Introduction 3
1.2. Basic measurement concept 3
1.3. Analyzer description 3

2. Getting Started 4

2.1. Installation 4
2.1.1. Location 4
2.1.2. Power requirements 4
2.1.3. Warm up time 4
2.2. Initial setup – Quick start 4
2.2.1. Factory Calibrated Analyzer 4
2.2.2. Uncalibrated analyzer 5
2.3. Menu screens 6
2.4. Zeroing the analyzer 6
2.4.1. For measurements above 1 ppm 6
2.4.2. For measurement below 1 ppm 7

3. Calibration 7

3.1. Considerations for calibration standards 7
3.2. Preparing calibration standards 7
3.2.1. Gravimetric standards 7
3.3. Calibrating the analyzer 8
3.3.1. Collecting calibration data 8

4. Analyzing a Sample 9

4.1. Analyzer pre-check 9
4.2. 10 to 1 Extraction procedure for oil in water 9
4.2.1. Supplies needed for extraction in water 9
4.2.2. Considerations: 9
4.2.3. Total Oil and Grease (TOG) Extraction from Water 10
4.2.4. Total Petroleum Hydrocarbon (TPH) extraction from water 10
4.3. 1 to 1 Extraction procedure for TPH in soil 10
4.3.1. Supplies needed for extraction in soil 10
4.3.2. TPH soil extraction procedure 11
4.4. Dilution Procedures 11
4.4.1. 10:1 Dilution 11
4.4.2. Cuvette Considerations 11

5. Service and Customer Support 12

Figure 1: InfraCal 2 Layout 3
Figure 2: Touch Screen Layout 4
Figure 3: Setting zero timer screen 6
Figure 4: Zeroing 7
Figure 5: Set zero 7

1. InfraCal 2, Model TRANS-SP Overview

1.1. Introduction

The InfraCal 2 Analyzer is designed to measure solvent extractable material (hydrocarbons or oil and grease) by infrared determination in water, wastewater, or soil using Freon, perchloroethylene, or S-316 or other infrared transparent solvents for the extraction procedure. A detector is with a fixed 3.4 μm ($2940cm^{-1}$) filter is used to measure hydrocarbon concentrations. The InfraCal 2 complies with ASTM D7066 Method and EPA Methods 413.1 and 418.1 and will correlate to EPA 1664.

1.2. Basic measurement concept

The InfraCal 2 Analyzer makes use of the fact that hydrocarbons such as oil and grease can be extracted from water or soil through the use of an appropriate solvent and extraction procedure. The extracted hydrocarbons absorb infrared energy at a specific wavelength and the amount of energy absorbed is proportional to the concentration of oil and grease in the solvent. The analyzer can be calibrated to read out directly in the desired units such as ppm or mg/L.

The InfraCal 2 touch screen display includes the capability for multiple calibrations, a wizard guide for calibration, multiple level user database, multiple languages with user preference selection, high/low alarm and control limits, and measurements stored in a history table for recall or export to a flash or serial port.

1.3. Analyzer description

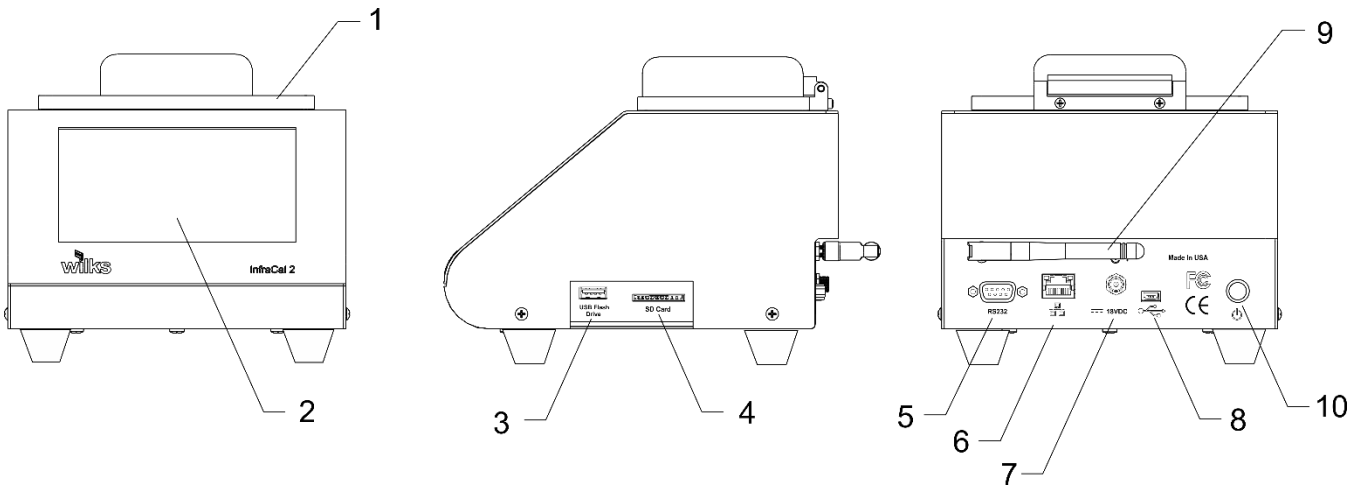

Figure 1: InfraCal 2 Layout

1. Transmission sample stage with cover
2. LCD touch screen
3. USB flash drive port
4. SD Card
5. RS232 port
6. Ethernet port
7. 18 VDC input
8. USB mini-B
9. WiFi (optional)
10. On/Off push button

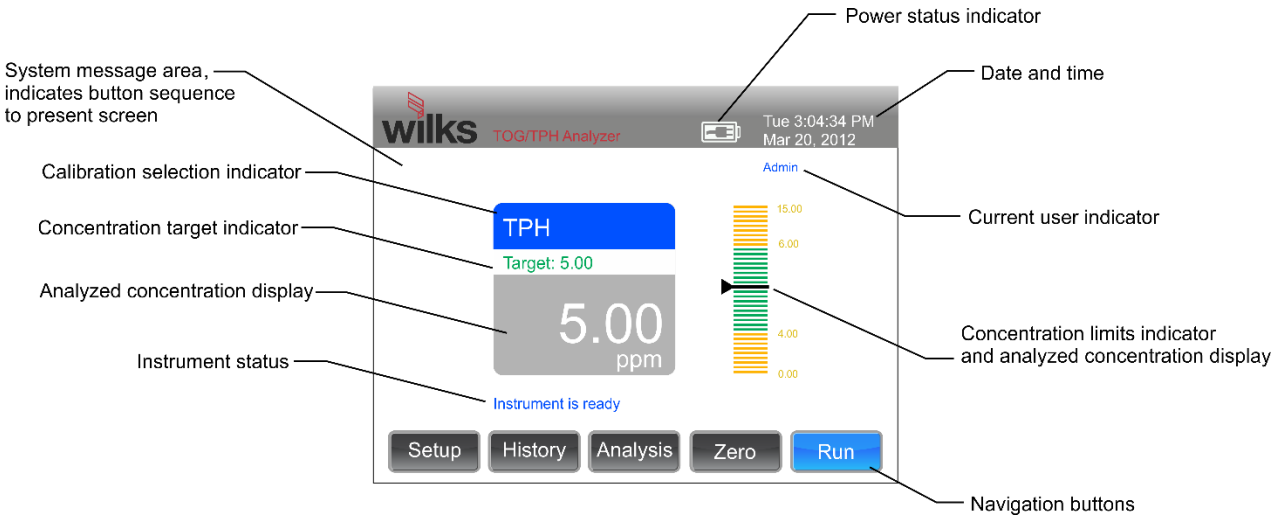

Figure 2: Touch Screen Layout

---

2. Getting Started

2.1. Installation

2.1.1. Location

The InfraCal 2 Analyzer is designed for on-site measurements and is relatively insensitive to vibration and ambient temperature changes. For more sensitive readings below 1 ppm, it is best to avoid dramatic temperature changes such as direct sun or a location in the direct air flow of a heating or air conditioning vent.

2.1.2. Power requirements

A standard 18 volt power supply is provided with the analyzer and an optional internal battery pack is available at the time of purchase. The analyzer may be operated from any grounded A.C. outlet (line power requirements: 100 - 250 VAC, 50-60 Hz, 0.5-0.3 amps). When operating, the InfraCal 2 Analyzer uses 0.5 amps and up to 2.1 amps with the internal battery charging.

2.1.3. Warm up time

For normal operation, it is recommended that the instrument be allowed to warm up for 1 hour prior to use. The InfraCal 2 Analyzer draws very little power and, if used daily, it can be left on at all times (unless operated from the internal battery pack).

2.2. Initial setup – Quick start

See Section 4.1.3 in the InfraCal 2 Operation Manual for details on the analysis screens.

2.2.1. Factory Calibrated Analyzer

1. Select “Analysis” and then highlight the appropriate factory calibration from the table.

2. Select “Edit” and “Next” to scroll through the optional alarm limits, zero expiration, calibration expiration or other parameters in the menu. Select “Done” when complete. Some options are not available to change in a factory calibration.
3. Select “Done” again to begin analysis.
4. Insert a cuvette filled with clean solvent, close the cover then select “Zero” then “Set Zero”. See section 2.4 for zeroing details.
5. The InfraCal 2 is now ready for sample analysis. See Section 4 Analyzing a Sample for details on sample preparation.

Note: For measurements below 2 ppm it is important to use the same cuvette for zeroing and sample testing. The cuvette must also be oriented in the same direction. Either mark the frosted side of the cuvette as an orientation reference or situate the clear side of the cuvette with the “i” mark in the upper left corner to the left. For measurements below 2 ppm, analyzer must be zeroed prior to each analysis. Also, be sure to close cover for both zeroing and sample analysis.

2.2.2. Uncalibrated analyzer

See Section 4.1.3 in the InfraCal 2 Operation Manual for details on the analysis screens.

2.2.2.1. Set-up

The user will need to set up as “Admin”

1. Select Setup
2. Under “User Name” choose Admin.
3. Select PIN to enter optional security pin. Enter a minimum of 4 digits to maximum of 15 followed by “=”
4. Select “Done”.
5. Insert a cuvette filled with clean solvent, close cover then select “Zero” then “Set Zero”. See section 2.4 in the InfraCal TRANS-SP OiW Manual for zeroing details.

Note: For measurements below 2 ppm it is important to use the same cuvette for zeroing and sample testing. The cuvette must also be oriented in the same direction. Either mark the frosted side of the cuvette as an orientation reference or situate the clear side of the cuvette with the “i” mark in the upper left corner to the left. For measurements below 2 ppm, analyzer must be zeroed prior to each analysis. Also, be sure to close cover for both zeroing and sample analysis.

2.2.2.2. Calibration

1. Select “Analysis”, then “New”.
2. Name the analysis by selecting the text box. Enter precision. For levels high level calibrations it should XXXXX. and for levels below 10 ppm it should be XXXX.X. Select desired units.
3. Select “Next” and set Run Countdown Timer (4 minutes is suggested for measurements below 10 ppm and 2 minutes for measurements above 10 ppm) and Zero Countdown Timer (4 minutes is suggested for measurements below 10 ppm and 2 minutes for measurements above 10 ppm). Select “Skip” to activate the option to skip the timer during operation.
4. Set Measurement Time to 30 seconds. The zero and calibration expirations are optional.
5. Select “Next” and set “Maximum Range” to highest calibration point.
6. Select “Next” to set the optional alarm limits.
7. Select “Next” and a table will be displayed, select cell “Point 1” under “Absorbance” and enter “0”.
8. Select “Curve”.
9. With the appropriate standards covering the range of analysis, begin generating the calibration.

10. Insert a cuvette filled with clean solvent, close the cover, select “Zero”.
11. For measurements below 2 ppm, check the zero prior to testing each standard. If reading is not zero, ensure solvent and cuvette is clean. Refilling cuvette with clean solvent may be required. If reading is not zero and cuvette is clean, select “Set Zero”, then select “Done”. See section 2.4 in the InfraCal TRANS-SP OiW Manual for zeroing details.
12. Begin with the lowest standard value. Select “Value” and enter the calibration standard value using the keypad followed by “=”
13. Fill cuvette with the first standard and place into sample holder and select “Run”. Repeat the standard at least three times. The results will be shown on the left side of the screen. Select the results that will be averaged for that standard value. If one of the results is significantly different, it should not be included in the calibration. Tap the value to deselect.
14. When complete, select “Add” and the first calibration point will be added to the table.
15. Select “Value” for the next calibration standard and repeat steps 10-12 for the remaining standards.
16. After the last standard, select “Back” to review the table. Adjustments can be made to the table by tapping the appropriate text box and using the keypad.
17. If the calibration is complete, select “Done”. The calibration is now part of the Analysis table.
18. Select “Done” again to begin analysis. See Section 4 “Analyzing a Sample” the InfraCal TRANS-SP OiW Manual for details on sample preparation.

2.2.2.3. Calibration with low level standards (0.5 to 7.5 mg/L)

1. For low ppm measurements it is important to use the same cuvette for zeroing and sample testing.
2. The cuvette must also be oriented in the same direction. Either mark the frosted side of the cuvette as an orientation reference or situate the clear side of the cuvette with the “i” mark in the upper left corner to the left.
3. Cover should be closed for both zeroing and sample analysis.
4. Zero and Run timers should be set to 4 minutes.
5. Zero the analyzer prior to each analysis. Additional zero samples are included in the calibration standards purchased through Wilks.

2.3. Menu screens

After the start up screen, the main set up screen will appear with button for Setup, History, Analysis, Zero, and Run. See InfraCal 2 Operations Manual for details on screens and related functions.

2.4. Zeroing the analyzer

The frequency for zeroing depends on the required sensitivity. For levels above 1 ppm, every 2 hours should be sufficient. For levels below 1 ppm, the analyzer should be zeroed prior to each measurement and have the timer for zeroing and analysis each set to 4 minutes. For details on setting the timer see section 4.1.4 “Analysis screen” in the InfraCal 2 Operations Manual

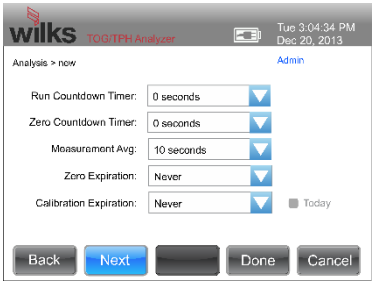

Figure 3: Setting zero timer screen

Note: For sub ppm measurements it is important to use the same cuvette for zeroing and sample testing. The cuvette must also be oriented in the same direction. Either mark the frosted side of the cuvette as an orientation reference or situate the clear side of the cuvette with the “i” mark in the upper left corner to the left.

2.4.1. For measurements above 1 ppm

1. Fill the cuvette with same clean solvent used for sample analysis
2. Insert cuvette with frost side facing front
3. Select “Zero”

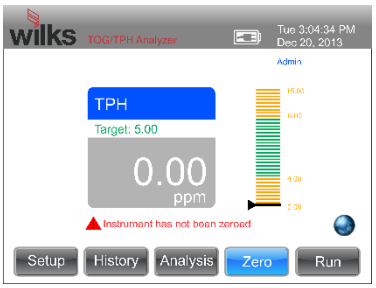

4. If reading is not zero, ensure solvent and cuvette is clean. Refilling cuvette with clean solvent may be required.
5. If reading is not zero and cuvette is clean, select "Set Zero" and "Done".

Figure 4: Zeroing

2.4.2. For measurement below 1 ppm

1. Filter the solvent using a 10 ml glass syringe with a luer lock fitting and a Millipore Millex syringe driven filter (CAT:SLLHC25NS) or equivalent to remove interfering dust from the solvent.
2. Follow steps 1-5 in section 2.4.1 above.

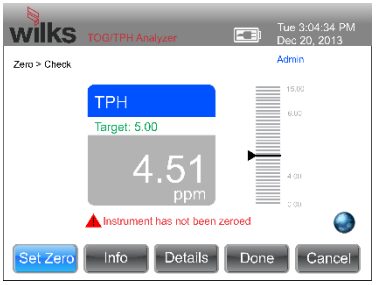

Figure 5: Set zero

---

3. Calibration

See Section 4.1.4 "Analysis screen" for detailed instructions to create or edit a calibration or Section 2.2.2 above for quick start instructions.

3.1. Considerations for calibration standards

The following are options for calibration:

1. Non-certified factory calibration. Wilks Enterprise can provide the InfraCal 2 Analyzer with a non-certified factory calibration for different ranges of analysis and with different solvents.
2. Purchase pre-prepared standards from Wilks Enterprise.
3. Prepare your own standards. Standard preparation is described in detail in section 3.3.
4. Certified calibration by an independent laboratory.

3.2. Preparing calibration standards

Standards can be prepared using a non-volatile (heavy weight) oil without additives. Calibration standards should cover the desired range for the analysis. An ideal calibration set contains a minimum of five samples. For example, if your range is 5 – 250 mg/L the standards could be 25, 50, 100, 150, 200 and 250 mg/L.

The calibration curve for oil and grease is typically linear up to 300 ppm for oil in water with a 10:1 (3000 mg/kg for a1:1 oil in soil extraction ratio) above which the curve flattens out. The linear range will be accurate up to the highest calibration standard. Samples above the highest calibration point can be diluted to within the calibration range or an additional calibration can be created for higher range samples. Section 4.4 provides dilution procedures.

3.2.1. Gravimetric standards

Supplies needed for gravimetric calibration

125 ml Teflon wash bottle
10 ml and/or 20 ml volumetric flasks
Calibrated glass pipettes in the 0.5-3 ml range (depending of desired stock solution dilutions)
40 ml vials with Teflon lined caps (at least 3 for holding standards)
Solvent (see Appendix C for solvent options)
Calibration oil

Analytical Balance that reads to 0.001 gram

Prepare a stock solution and make the appropriate dilutions to cover analysis range. For water analysis with an extraction ratio of 10:1, the oil and grease is concentrated 10 times in the solvent. The actual value of the standard is divided by 10 in order to match the concentrated value of the extract.

1. Weigh about 0.1 gram of oil in a 10 ml volumetric flask.
2. Record the exact weight.
3. Fill with solvent up to the 10 ml line.

If the exact weight were 0.11, the exact concentration is calculated below:
0.110 g/10 ml = 110 mg/10 ml = 11,000 mg/L

To make the standard match the value for the concentration in the sample for a 10:1 oil in water extraction, the actual value of the oil in solvent is divided by 10.
11,000/10 = 1,100 mg/L
Note: *For a 1:1extraction ratio with TPH in soil, the actual stock solution value is not divided by 10.*
For each standard, using a calibrated glass pipette, pipette the stock solution into a 10 or 20 ml volumetric flask and fill with solvent.

Using the example of a 1,100 mg/L stock solution, dilutions could be as follows:

Stock solution	**Solvent**	**Standard value***
2 ml	Fill to 10 ml	220
3 ml	Fill to 20 ml	165
1 ml	Fill to 10 ml	110
0.5 ml	Fill to 10 ml	55
0.5 ml	Fill to 20 ml	27.5

*For a 1,100 mg/L stock solution

3.3. Calibrating the analyzer

See Section 4.1.4 in the InfraCal 2 Operations Manual for testing standards and entering the calibration.

3.3.1. Collecting calibration data

1. Allow the analyzer to warm up at least one hour.
2. Zero prior to running calibration standards (see section 2.4).
3. For most accurate results sub-ppm standard must also be filtered. Filter the sample using a 10 ml glass syringe with a luer lock fitting and a Millipore Millex syringe driven filter (CAT:SLLHC25NS) or equivalent to remove interfering dust from the standard.
4. Fill cuvette with the lowest value standard, insert in sample stage. It is recommended to repeat each standard at least three times. The calibration wizard can automatically average the readings. Repeat for all of the standards. See section 4.1.4 Analysis screen for creating a calibration and Section 2.2.2 above for quick start version. The option is available to create as many calibrations as desired.
5. ***Note:*** *The results can plotted graphically as a calibration curve. The resulting plot can be used to prepare a reference chart for users who prefer not to use the analyzer's internal calibration program for data points to be edited into calibration.*

4. Analyzing a Sample

These extraction procedures are a simplified version of ASTM Method D 3921 or D7066 and EPA methods 418.1 or 413.2. The ASTM or EPA extraction methods may be used if desired.

4.1. Analyzer pre-check

1. For calibration, allow the analyzer to warm-up and stabilize for one hour

2. Ensure that the cuvette is clean. Use clean solvent to rinse the cuvette after each use. *Do not use water to clean the cuvette. If water does get into the cuvette, fill with isopropyl alcohol, empty and allow to dry thoroughly.*

3. Perform a zero check (section 2.2.3)

4. Make sure glassware and sample containers are clean. A solvent rinse of glassware especially for low level measurements may be required.

4.2. 10 to 1 Extraction procedure for oil in water

4.2.1. Supplies needed for extraction in water

125-ml Teflon wash bottle

100-ml graduated cylinder with stopper or sample bottle graduated in ml (i.e: 177-ml prescription bottles)

125-ml stopper separatory funnel or sample bottles with septa caps

Hydrochloric (HCl) or sulfuric acid (H_2SO_4) - dilute with water 1:1

pH indicator strips or pH meter

10-ml or 25-ml Graduated cylinder (depending on sample size)

Sodium sulfate (Na_2SO_4), ACS, granular anhydrous

Glass funnel

Whatman 40 filter paper, 11cm, or equivalent

Silica gel (for TPH), anhydrous, 75-150 micrometers

Disposable polyethylene pipette or equivalent

5-mL syringe (for use with prescription bottles)

Solvent (see Appendix B for solvent options)

4.2.2. Considerations:

- Make sure glassware for use in analysis is clean. Any residual hydrocarbons in the glassware and sampling containers will be extracted and added to the TOG or TPH reading. To check the glassware, rinse with solvent then put the solvent rinse in the quartz cuvette.
- Oil and grease tends to adhere to the surfaces it comes in contact with. Use the entire sample collected. Either mix the solvent and sample in the sample collection container or rinse the sample collection container with a portion of the solvent to be used for extraction.

4.2.3. Total Oil and Grease (TOG) Extraction from Water

1. Pour a measured amount of sample into separatory funnel. If using a graduated prescription bottle with a septa cap, solvent can be mixed directly in the bottle without using the separatory funnel.
2. Adjust the pH to less than 2 with Hydrochloric acid or Sulfuric Acid (typically 3-5 drops depending on buffers in sample).
3. Add one tenth of the sample size of solvent to the sample collection container to rinse interior surfaces and cap. (With the 177-ml prescription bottle, it is convenient to collect 140 ml of sample and add 14 ml of solvent). Pour this solvent into separatory funnel containing sample or directly into the prescription bottle.
4. Shake the separatory funnel or prescription bottle vigorously for 2 minutes with periodic venting to release excess pressure.
5. Allow the phases to separate.
6. Place a filter paper in a filter funnel and add approximately 1 gram (1Tablespoon) of sodium sulfate.
7. Drain the solvent (lower) layer from the separatory funnel through the sodium sulfate into a clean container (10-mL graduated cylinder can be used). With the prescription bottle, invert the bottle so that the solvent layer fills the neck. Using a 5 ml syringe withdraw 4-5 mL of the solvent layer and deliver through the sodium sulfate into a clean container.

Note: *Use of the sodium sulfate is necessary to prevent water from interfering with the analysis. With totally hydrophobic solvents, this step may be skipped. It is not necessary to collect all of the solvent but it is necessary to preclude water to prevent caking of the sodium sulfate.*

8. Fill the cuvette with the solvent extract.
9. Place the cuvette into the holder on the InfraCal 2 Analyzer with the frosted side facing front.
10. Select "Run" and the value will be displayed.
11. If the result is above the calibration range, see section 4.4 for dilution procedure or create/select a second calibration for the higher range.

4.2.4. Total Petroleum Hydrocarbon (TPH) extraction from water

The difference between TPH (Total Petroleum Hydrocarbon) and TOG (Total Oil and Grease) is the polar organics are removed from the solvent extract using silica gel. The remaining hydrocarbons are the non-polar components considered to be TPH.

1. Follow the above procedure steps 1-7.
2. Place a filter paper in a filter funnel and add approximately 1 gram (1 Tablespoon) of silica gel.
3. Pour solvent extract from container though the silica gel into a clean container.
4. Fill the cuvette with the extract.
5. Place the cuvette into the holder with the frosted side facing front.
6. Press the *RUN* button and the value will be displayed.
7. If the result is above the calibration range, see section 4.4 for dilution procedure or create/select a second calibration for the higher range.

4.3. 1 to 1 Extraction procedure for TPH in soil

4.3.1. Supplies needed for extraction in soil

40-mL vials with Teflon-faced caps (EPA/VOA)
10-mL or 25-mL Graduated cylinder (depending on sample size)
Glass funnel
Whatman 40 filter paper, 11cm, or equivalent
Silica gel anhydrous, 75-150 micrometers

Disposable polyethylene disposable pipette or equivalent
Plastic air syringe with filter frit and plunger (or equivalent)
Sample spatula
Solvent (see Appendix B for solvent options)
Analytical balance that reads to 0.1 gram

4.3.2. TPH soil extraction procedure

1. Collect a soil sample directly in a washed and weighed (to the nearest 0.1 gram) EPA/VOA 40 ml vial. The sample should be about ¾ of the volume of the vial.
2. Weigh the sample to the nearest 0.1gram, subtracting the tare weight of the vial. Note the weight.
3. If the sample is wet and clumpy, add up to 5 grams of silica gel. Use the spatula to break up the clumps.
4. Add the same amount of solvent in ml as the soil sample weight in grams (do not include the weight of the silica gel). ie: for 11.2 grams of soil, add 11.2 ml of solvent. This will give a 1:1 extraction ratio.
5. Cap the vial with the Teflon side of the liner toward the sample. Shake vigorously for 2 minutes.
6. Pour the solvent into the plastic air syringe with filter frit, leaving as much of the soil in the vial as possible.
7. Place the plunger into the air syringe force the solvent through the filter frit into a clean container or directly into the cuvette.
8. Place a filter paper in a filter funnel and add approximately 1 teaspoon of silica gel.
9. Pour extract from container though the silica gel into a clean container.
10. Fill the cuvette with the extract.
11. Place the cuvette into the holder with the frosted side facing front.
12. Select "Run" and the value will be displayed.
13. If the result is above the calibration range, see section 4.4 for dilution procedure or create/select a second calibration for the higher range.

4.4. Dilution Procedures

If the sample reading is above the highest calibration point, a dilution must be performed to bring it into the measurement range. A second high range calibration may also be used. See Section 4.1.4 in the InfraCal 2 Operations Manual for detail on creating a new calibration.

4.4.1. 10:1 Dilution

1. Pour 1 ml of solvent extract into a 10-mL graduated cylinder
2. Add 9 mL of solvent for a 10 to 1 dilution.
3. Mix and pour diluted extract into a clean cuvette.
4. Add a zero to the result on the InfraCal's digital display and record your reading, i.e. if the result is 465, the extract value after dilution is 4650 ppm.
5. This procedure may be repeated if the extract is still not within the calibration range. Add two zero's to the InfraCal's digital display if two dilutions are performed.

4.4.2. Cuvette Considerations

1. All cuvettes must be made with infrared transmitting quartz windows ("Infrasil" or equal).
2. Insert the cuvette with the frosted sides facing the front and back of the Analyzer. For optimum performance always insert with the same orientation. If multiple cuvettes are used they should be matched. For sub ppm measurements the same cuvette should be used for zeroing and analysis.
3. Rinse cuvettes with clean solvent after each use. *Do not use water to clean the cuvette. If water does get into the cuvette, fill with isopropyl alcohol, empty and allow to dry thoroughly.*

5. Service and Customer Support

Your InfraCal 2 Analyzer may have been purchased either directly from Wilks Enterprise or from a local dealer or representative. If you have a technical question relative to the operation of the instrument or relative to the analysis, please contact Wilks Enterprise at the contact address provided below:

Customer Services Department
Wilks Enterprise, Inc.
25 Van Zant Street, Suite 8F
East Norwalk, CT 06855
USA
Telephone: (203) 855-9136
FAX: (203) 838-9868
E-mail:tech@WilksIR.com

Service and Repair

During the warranty period, Wilks Enterprise, Inc. offers free factory service for all failures that occur from normal instrument usage. The user is only required to cover the cost of shipping the instrument to the factory. After the warranty period, the user is required to cover the factory's cost of servicing plus all shipping charges. For extended service contracts or factory service charges, please contact Wilks Enterprise, Inc. for details.

Appendix A: Correlation to an Alternate Method

The following can be used to calculate revised calibration points to re-enter into calibration table as a scale factor. For details on how to access the calibration table, see Section 4.1.4 in the InfraCal 2 Operations Manual.

Example 1: Assume the sample results on the **InfraCal 2** are consistently lower than the alternate method as follows:

SAMPLE A = 25 ppm
SAMPLE B = 13 ppm

SAMPLE C = 11 ppm

Assume the **alternate method** results used to analyze the duplicate samples are consistently higher than the InfraCal 2 as follows:

SAMPLE A= 63 ppm
SAMPLE B= 33 ppm
SAMPLE **C**= 28 ppm

Add the results of all samples for the InfraCal and the alternate method.

InfraCal results: 25 + 13 + 11 = 49 ppm
Alternate Method Results: 63 + 33 + 28 = 124 ppm

Divide the total alternate method results by the InfraCal results
124/49 **=** 2.531

Enter the result (2.531 for this example) into the Scale Factor column of the Calibration Table

Example 2: Assume the sample results on the **InfraCal 2** are consistently higher than the alternate method as follows:

SAMPLE A = 63 ppm
SAMPLE B = 33 ppm
SAMPLE C = 28 ppm

Assume the **alternate method** results used to analyze the duplicate samples are consistently lower than the InfraCal 2 as follows:

SAMPLE A= 25 ppm
SAMPLE B= 13 ppm
SAMPLE C= 11 ppm

InfraCal results: 63 + 33 + 28 = 124 ppm
Alternate Method Results: 25 + 13 + 11 = 49 ppm

Divide the total alternate method results by the InfraCal results
49/124 = 0.395

Enter the result (0.395 for this example) into the Scale Factor column of the Calibration Table

---

Appendix B: Solvent Selection Guide

Refer to the MSDS safety procedures for the solvent selected.

Freon-113 Specified for EPA Methods 413.2 and 418.1. Freon-113 may not be available in many parts of the world due to being banned in the Montreal Protocol. Since it is heavier than water, the solvent after extraction will be on the bottom requiring a separatory funnel or syringe with an inverted sample bottle with a septa cap. Because of its infrared transparency, it can be used with a 10mm quartz cuvette. Because no evaporation step is required light end volatiles will be retained for measurement. Freon is ideal for applications requiring the measurement of light ends, as well as, the heavier components in water and soil samples.

Perchloroethylene A common replacement for Freon-113. Since it is heavier than water, the solvent after extraction will be on the bottom requiring a separatory funnel or syringe with an inverted sample

bottle with a septa cap. Because of its infrared transparency, it can be used with a 10mm quartz cuvette. Because no evaporation step is required light end volatiles will be retained for measurement. Many grades are stabilized with hydrocarbons making them unsuitable for TOG and TPH analysis. The only hydrocarbon-free grade we have found suitable is J.T. Baker's Tetrachloroethylene ULTRA RESI-ANALYZED (Perchloroethylene) product # 9360, www.mallbaker.com .

S-316 A proprietary, non-hydrocarbon solvent said by its manufacture to be environmentally safe. It is the solvent used in ASTM D7066. Since it is heavier than water, the solvent after extraction will be on the bottom requiring a separatory funnel or syringe with an inverted sample bottle with a septa cap. Because of its infrared transparency, it can be used with a 10mm quartz cuvette. Because no evaporation step is required light end volatiles will be retained for measurement.