wilks
simple analytical solutions

InfraCal 2

Biodiesel Blend Analyzer

Model ATR-B

User's Guide



InfraCal and Wilks are registered trademarks of Wilks Enterprise, Inc.
Copyright 2013 Wilks Enterprise, Inc., East Norwalk, CT

WilksIR.com

Rev. 1.0, August 2013

Table of Contents

1. InfraCal 2, Model ATR-B Overview 3

1.1. Introduction 3
1.2. Basic measurement concept 3
1.3. Analyzer description 3

2. Getting Started 4

2.1. Installation 4
2.1.1. Location 4
2.1.2. Power requirements 4
2.1.3. Warm up time 4
2.2. Initial setup – Quick start 4
2.2.1. Factory calibrated analyzer 4
2.2.2. Non-factory calibrated analyzer 5
2.3. Menu screens 5
2.4. Zeroing the analyzer 6

3. Calibration 6

3.1. Considerations for calibration standards 6
3.2. Preparing calibration standards 6
3.3. Calibrating the analyzer 7
3.3.1. Collecting calibration data 7

4. Analyzing a Sample 7

4.1. Analyzer pre-check 7

5. Service and Customer Support 8

Figure 1: InfraCal 2 Layout 3
Figure 2: Touch Screen Layout 4
Figure 3: Zeroing 6
Figure 4: Set zero 6

1. InfraCal 2, Model ATR-B Overview

1.1. Introduction

The InfraCal 2 Analyzer for measuring biodiesel in diesel is a filter based infrared analyzer utilizing a fixed band pass filter/pyroelectric detector with one measurement wavelength preset for 5.73 microns (1745 cm^{-1}) and a Horizontal Attenuated Total Reflection (HATR) zinc selenide crystal sample stage.

1.2. Basic measurement concept

The InfraCal 2 Analyzer makes use of the fact that many molecules absorb infrared energy at a specific wavelength and the amount of energy absorbed is proportional to the concentration. Biodiesel is measured at the carbonyl band, 5.73 microns (1745 cm^{-1}). The energy collected at the analytical wavelength (I_A), is reduced when compared to the energy collected at the reference wavelength (I_R). The sample concentration is determined by a calculation of the logarithm of the ratio of the light transmission at the reference wavelength to the light transmission at the analytical wavelength (Beer-Lambert law). "A" equals the infrared absorbance. The Beer-Lambert law assumes a linear relationship between absorbance and concentration.

Beer-Lambert Law: $\mathbf{A = \log I_R/I_A}$

Concentration in the desired units is presented on the display.

1.3. Analyzer description

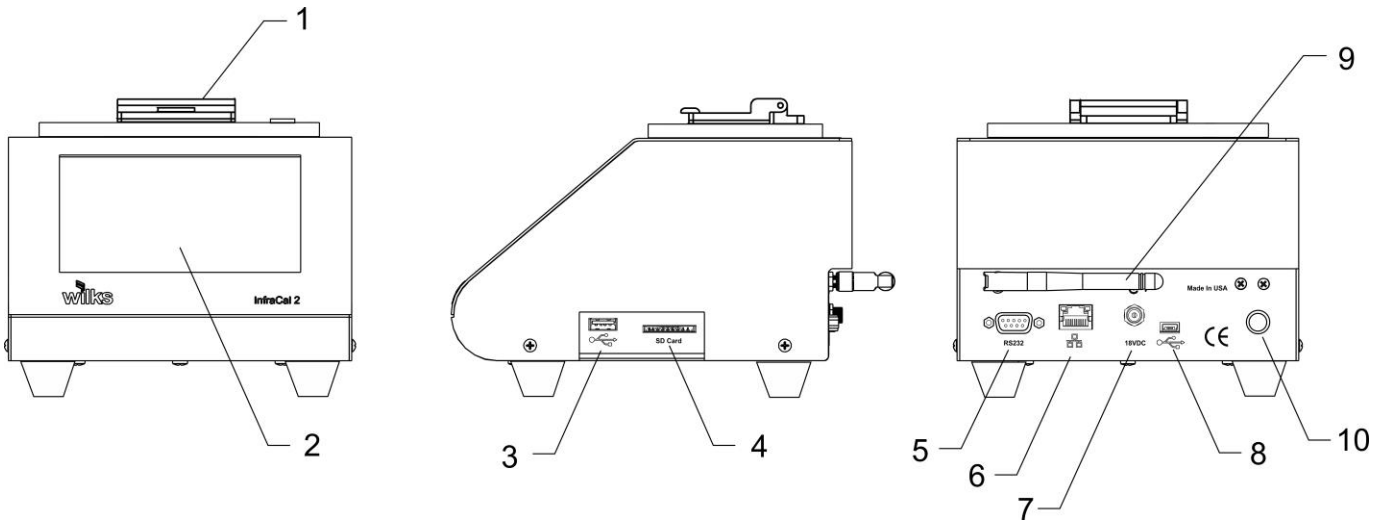

Figure 1: InfraCal 2 Layout

1. Horizontal ATR Sample Stage
2. LCD touch screen
3. USB flash drive port
4. SD Card
5. RS232 port
6. Ethernet port
7. 18 VDC input
8. USB mini-B
9. WiFi antenna (optional)
10. On/Off push button



Figure 2: Touch Screen Layout

---

2. Getting Started

2.1. Installation

2.1.1. Location

The InfraCal 2 Analyzer is designed for on-site measurements and is relatively insensitive to vibration and ambient temperature changes. It is best to avoid dramatic temperature changes such as direct sun or a location in the direct air flow of a heating or air conditioning vent.

2.1.2. Power requirements

A standard 18 volt power supply is provided with the analyzer and an optional internal battery pack is available at the time of purchase. The analyzer may be operated from any grounded A.C. outlet (line power requirements: 100 - 250 VAC, 50-60 Hz, 0.5-0.3 amps). When operating, the InfraCal 2 Analyzer uses 0.5 amps and up to 2.1 amps with the internal battery charging.

2.1.3. Warm up time

For normal operation, it is recommended that the instrument be allowed to warm up for 1 hour prior to use. The InfraCal 2 Analyzer draws very little power and, if used daily, it can be left on at all times (unless operated from the internal battery pack).

2.2. Initial setup – Quick start

2.2.1. Factory calibrated analyzer

See Section 4.1.4 in the separate InfraCal 2 Operation Manual for details on the analysis screens.

1. Select “Analysis” and then select the appropriate factory calibration from the table.

2. To set the optional alarm limits, zero expiration, calibration expiration or other parameters in the menu, select “Edit”, then “Next” to scroll through options menus. Select “Done” when complete.
3. Select “Done” again to begin analysis.
4. Clean ATR crystal by putting solvent (hexane, pentane or similar solvent) in the trough and wipe in one direction and allow to dry. Repeat at least 2 times.
5. Select “Zero”. If reading is not zero, repeat cleaning the ATR crystal and select “Zero” again.
6. If reading is still not zero and ATR crystal is clean, select “Set Zero” and “Done”. See section 2.4 for zeroing details.
7. The InfraCal 2 is now ready for sample analysis.

2.2.2. Non-factory calibrated analyzer

See Section 4.1.4 in the separate InfraCal 2 Operation Manual for details on the analysis screens.

2.2.2.1. Setup

The user will need to set up as “Admin”

1. Select Setup
2. Under “User Name” choose Admin.
3. Select PIN to enter optional security pin. Enter a minimum of 4 digits to maximum of 15 followed by “=”
4. Select “Done”.
5. Clean ATR crystal by putting solvent (hexane, pentane or similar solvent) in the trough, wipe in one direction and allow to dry. Repeat at least 2 times.
6. Select “Zero”. If reading is not zero, repeat cleaning the ATR crystal and select “Zero” again.
7. If reading is still not zero and ATR crystal is clean, select “Set Zero” and “Done”.
8. See section 2.4 for zeroing details.

2.2.2.2. Calibration

1. Select “Analysis”, then “New”.
2. Name the analysis by selecting the text box.
3. To set the optional alarm limits, zero expiration, calibration expiration or other parameters in the menu, select “Next” to scroll through options menus. Scroll though drop down box to see complete list. When table is displayed, select “Curve”.
4. With the appropriate standards covering the range of analysis, begin generating the calibration.
5. Begin with the lowest standard value. Select “Value” and enter the calibration standard value using the keypad followed by “=”
6. Cover the crystal with the standard and select “Run”. Repeat the standard at least three times. The results will be shown on the left side of the screen. Select the results that will be averaged for that standard value. If one of the results is significantly different, it should not be included in the calibration. Tap the value to deselect.
7. When complete, select “Add” and the first calibration point will be added to the table.
8. Select “Value” for the next calibration standard and repeat steps 5-7 for the remaining standards.
9. After the last standard, select “Back” to review the table. Adjustments can be made to the table by tapping the appropriate text box and using the keypad.
10. If the calibration is complete, select “Done”. The calibration is now part of the Analysis table.
11. Select “Done” again to begin analysis.

2.3. Menu screens

After the start up screen, the main set up screen will appear with button for Setup, History, Analysis, Zero, and Run. See separate InfraCal 2 Operations Manual for details on screens and related functions.

2.4. Zeroing the analyzer

Clean the sample crystal at least two times with hexane, pentane or similar solvent. Make sure that the crystal is completely clean and dry. Biodiesel tends to coat surfaces so it is very important that the crystal be clean and dry before zeroing the analyzer.



Figure 3: Zeroing

1. Clean ATR crystal by putting solvent in the trough, wipe in one direction and allow to dry
2. Select "Zero". If reading is not zero, repeat cleaning the ATR crystal and select "Zero" again.
3. If reading is still not zero and ATR crystal is clean, select "Set Zero" and "Done".



Figure 4: Set zero

---

3. Calibration

See Section 4.1.4 "Analysis screen" in the separate InfraCal 2 Operations Manual for detailed instructions to create or edit a calibration or Section 2.2.2 above for quick start instructions.

3.1. Considerations for calibration standards

The following are options for calibration:

1. Factory calibration. Wilks Enterprise can provide the InfraCal 2 Analyzer with factory calibration for 0-30% or 0-100% biodiesel in diesel.
2. Purchase pre-prepared standards (0-30% or 0-100% biodiesel in diesel) from Wilks Enterprise.
3. Prepare your own standards. Standard preparation is described in detail in section 3.3.

3.2. Preparing calibration standards

Standards can be mixed volumetrically. The list below can be used as a guideline for mixing standards. Accurate volumetric glassware (pipettes and volumetric flasks) is essential for accurate standards. For a 0-30% range, a suggested calibration set would include: 2, 5, 10, 15, 20, 25, and 30%. For a 0-100% range, a suggested calibration set would include 5, 10, 15, 20, 30, 50, 75, 95 and 100%. These calibration sets will provide sufficient data for the InfraCal 2 Analyzer to display accurate results.

Volumetric Standards

%	Diesel	Biodiesel
0	20 ml	0 ml
5	19 ml	1 ml
10	18 ml	2 ml
15	17 ml	3 ml
20	16 ml	4 ml

25	15 ml	5 ml
30	14 ml	6 ml
35	13 ml	7 ml
40	12 ml	8 ml
45	11 ml	9 ml
50	10 ml	10 ml
55	9 ml	11 ml
60	8 ml	12 ml
65	7 ml	13 ml
70	6 ml	14 ml
75	5 ml	15 ml
80	4 ml	16 ml
85	3 ml	17 ml
90	2 ml	18 ml
95	1 ml	19 ml
100	0	20 ml

3.3. Calibrating the analyzer

See Section 4.1.4 in the separate InfraCal 2 Operations Manual for details on testing standards and entering the calibration.

3.3.1. Collecting calibration data

1. Allow the analyzer to warm up at least one hour.
2. Zero prior to running calibration standards (see section 2.4).
3. Using a disposable pipette deposit enough of the lowest value standard to cover the ATR crystal. It is recommended to repeat each standard at least three times. The calibration wizard can automatically average the readings. Repeat for all of the standards. See the section 4.1.4 for creating a calibration and Section 2.2.2 above for quick start version. The option is available to create as many calibrations as desired.

Note: *The results can plotted graphically as a calibration curve. The resulting plot can be used to prepare a reference chart for users who prefer not to use the analyzer's internal calibration program for data points to be edited into calibration.*

---

4. Analyzing a Sample

4.1. Analyzer pre-check

1. Allow the analyzer to warm-up and stabilize for one hour
2. Ensure that the ATR crystal is clean.
3. Perform a zero check (section 2.2.3)
4. Using a disposable pipette deposit enough of the sample to cover the ATR crystal and select "Run"
5. Remove the sample and clean the crystal promptly after analysis.

5. Service and Customer Support

Your InfraCal 2 Analyzer may have been purchased either directly from Wilks Enterprise or from a local dealer or representative. If you have a technical question relative to the operation of the instrument or relative to the analysis, please contact Wilks Enterprise at the contact address provided below:

Customer Services Department
Wilks Enterprise, Inc.
25 Van Zant Street, Suite 8F
East Norwalk, CT 06855
USA
Telephone: (203) 855-9136
FAX: (203) 838-9868
E-mail:tech@WilksIR.com

Service and Repair

During the warranty period, Wilks Enterprise, Inc. offers free factory service for all failures that occur from normal instrument usage. The user is only required to cover the cost of shipping the instrument to the factory. After the warranty period, the user is required to cover the factory's cost of servicing plus all shipping charges. For extended service contracts or factory service charges, please contact Wilks Enterprise, Inc. for details.